DISH PRO INSTALLATION CONSIDERATIONS

LNBFs AND SWITCHES

- Cannot "mix and match" DISH Pro LNBFs and switches with "legacy" LNBFs and switches – all components must be DISH Pro compatible. DISH Pro products (LNBFs, switches and receivers) have the DISH Pro logo.
- A maximum of three DP34 switches can be "trunked" together.
- The maximum recommended cable length is 200 feet from the LNBFs to the furthest receiver.

LEGACY INSTALLATIONS

- Must use the DISH Pro Adapter to connect any non-DISH Pro ("legacy") satellite receivers.
  - Legacy Receivers include:
    - Models 1000, 2000, 2700, 2800, 3000, 3700, 3800, 3900, 4000, 4700, 5000, 6000
    - DISH Player (Models 7100, 7200)
    - All OEM-equivalent brands
  - The DISH Pro Adapter "translates" the 13v/18v information the older "legacy" receiver understands to "DiSEqC 1.0" to communicate with the other DISH Pro equipment.
  - Legacy receivers do not have the advantage of the enhanced DISH Pro diagnostics.
- DISH Pro receivers can be used in "legacy" installations. They are "backward compatible". DISH Pro receivers have the DISH Pro logo on the receiver.

INSTALLATION MATERIALS

Materials used in a DISH Pro installation must be rated to 2150 MHz and pass DiSEqC.
These materials include:

- RG-6 cable
- Ground blocks
- Diplexers
- Splitters
- Line amps
- Barrel connectors
- Wall plates
- Surge protectors

Please refer to the latest "DISH Pro Approved Accessories list" located on retailer.echostar.com
Note: Proper system grounding is required.

GLOSSARY

- **Bandstacking (950-2150 MHz)**: combines the signals onto a single cable. The odd transponders are in the 950 to 1450 MHz frequency range; the even transponders are in the 1650 to 2150 MHz frequency range. Bandstacking simplifies installations by using only one cable per orbital location to an external switch.
- **DiSEqC 2.0**: Digital Satellite Equipment Control (pronounced "Die Sec"). A European open standard that provides two-way communication between receivers, switches and LNBFs for improved diagnostics. Increased cable lengths are also a benefit.
- **Dual Tuner Receiver**: A satellite receiver with two satellite tuner inputs (e.g. DISH 322, DISH Player-DVR 522, DISH 721, DISH Player-DVR 921).
- **Legacy**: LNBFs, switches and receivers produced prior to DISH Pro equipment. Examples include: Single, Dual, Twin and Quad LNBFs; SW21, SW42, SW44, SW64, SWAJ switches; and receivers released prior to DISH 301 (see list above).
- **Single Tuner Receiver**: A satellite receiver with one satellite tuner input (e.g. DISH 111, DISH 301, DISH 311, DISH 501/508, DISH Player-DVR 510 and DISH 811).
- **Tuner Inputs**: All of our original receivers had a single tuner input. Newer models may have two tuner inputs. The tuner input is the connection between the receiver and the switch and/or LNBF(s).

Revised 8/15/03

DISH PRO TECHNOLOGY INSTALLATION GUIDE

INTRODUCTION

Designed for our newest series of products, DISH Pro Technology is a revolutionary way to install systems and diagnose problems. This exciting technology simplifies installations, saving both time and money, and provides valuable tools for troubleshooting.

DISH PRO EQUIPMENT

- Receivers
  - DISH 111, DISH 301, DISH 311
  - DISH 501, DISH 508, DISH Player-DVR 510
  - DISH 721
  - DISH 322, DISH Player-DVR 522
  - DISH 811, DISH Player-DVR 921
  - All future DISH Network receivers
- Components
  - LNBFs
    - DISH Pro Single
    - DISH Pro Dual
    - DISH Pro Twin
    - DISH Pro Quad
  - Switches
    - DP21 Switch
    - DP34 Switch
  - DISH Pro Adapter for legacy receivers

STANDARD DISH PRO INSTALLATIONS

Two orbital locations, up to 2 tuners

- *(1) DP Twin on a DISH 500*

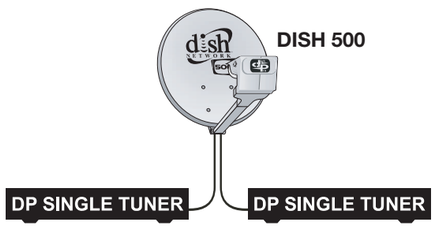

Or one Dual Tuner Receiver

One orbital location, 1 tuner

- *(1) DP Single on a DISH 300*

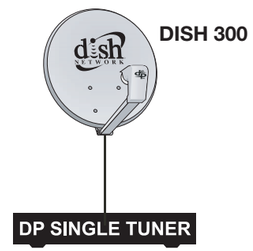

Two orbital locations, up to 4 tuners

- *(1) DP Quad on a DISH 500*

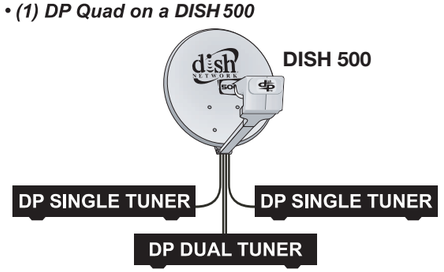

Or any combination of
Single and Dual Tuner Receivers
for a maximum of 4 Tuner Inputs

Up to three orbital locations, up to 4 tuners

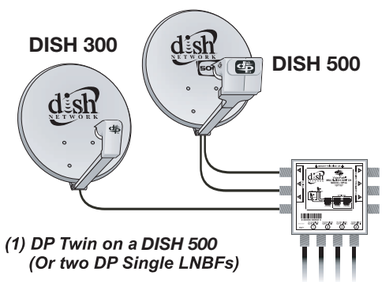

- *(1) DP Twin on a DISH 500*
  (Or two DP Single LNBFs)
- *(1) DP Single on a DISH 300*
- *(1) DP34 Switch*

To DP Receiver
Tuner Inputs

Up to three orbital locations, up to 2 tuners

- *(1) DP Twin on a DISH 500*
- *(1) DP Single on a DISH 300*
- *(1) DP21 Switch*

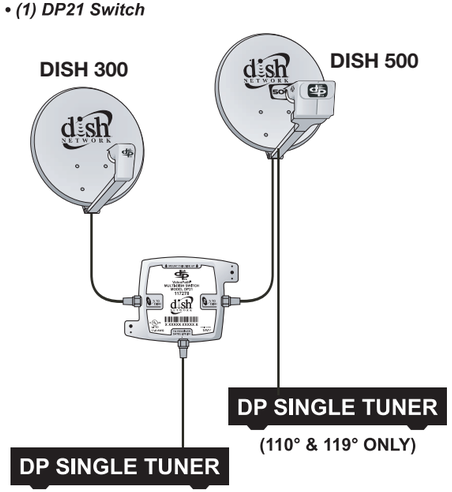

Three orbital locations, up to 2 tuners

- *(1) DP Twin on a DISH 500*
- *(1) DP Single on a DISH 300*
- *(2) DP21 Switches*
- *(1) DISH Pro-rated Splitter**

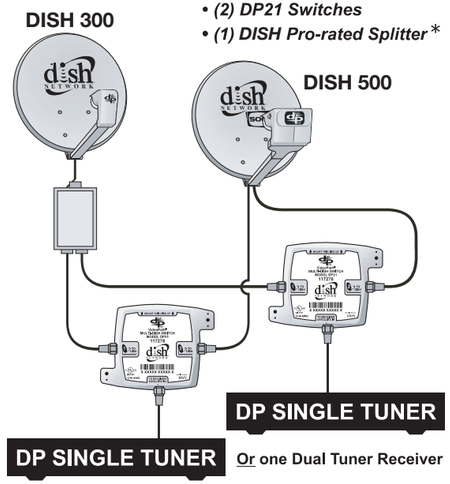

Or one Dual Tuner Receiver

* Splitter must be DC and DiSEqC blocking on one port & DiSEqC power passing on the other port. For the splitter, please see the DISH Pro Approved Accessories list

Note: Grounding according to the National Electrical Code (NEC) and all local electrical codes is required.

MULTIPLE RECEIEVER DISH PRO INSTALLATIONS

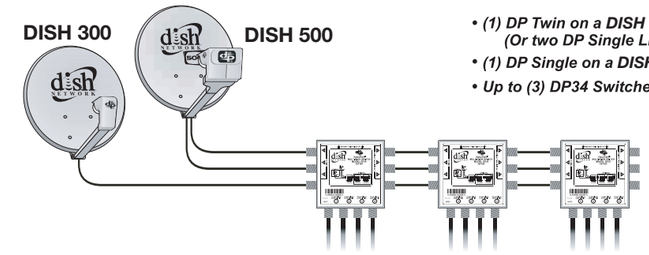

- *(1) DP Twin on a DISH 500*
  (Or two DP Single LNBFs)
- *(1) DP Single on a DISH 300*
- *Up to (3) DP34 Switches*

To DP Receiver Tuner Inputs

Two or three orbital locations, up to 12 tuners

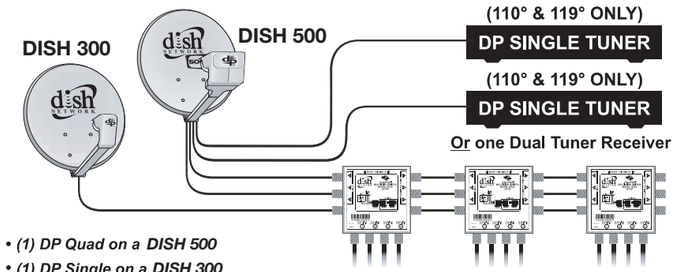

Or one Dual Tuner Receiver

- *(1) DP Quad on a DISH 500*
- *(1) DP Single on a DISH 300*
- *Up to (3) DP34 Switches*

To DP Receiver Tuner Inputs

Two or three orbital locations, up to 14 tuners

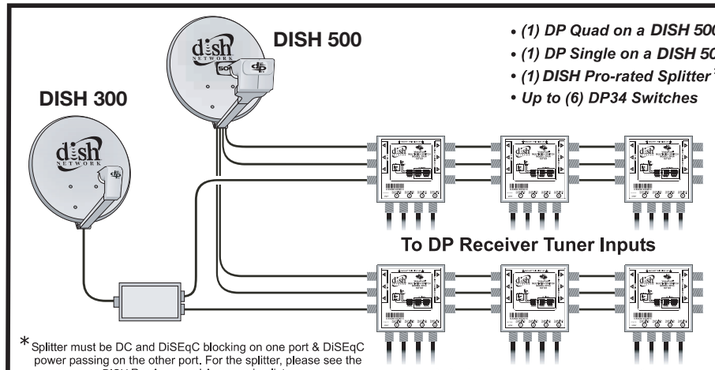

- *(1) DP Quad on a DISH 500*
- *(1) DP Single on a DISH 500*
- *(1) DISH Pro-rated Splitter**
- *Up to (6) DP34 Switches*

To DP Receiver Tuner Inputs

To DP Receiver Tuner Inputs

* Splitter must be DC and DiSEqC blocking on one port & DiSEqC power passing on the other port. For the splitter, please see the DISH Pro Approved Accessories list.
Each DP34 switch requires one receiver to be connected for power.

Two or three orbital locations, up to 24 tuners

LEGACY & DISH PRO INSTALLATIONS

Direct to LNBF

- *(1) DP Twin on a DISH 500*
- *DP Adapter for each Legacy Receiver*

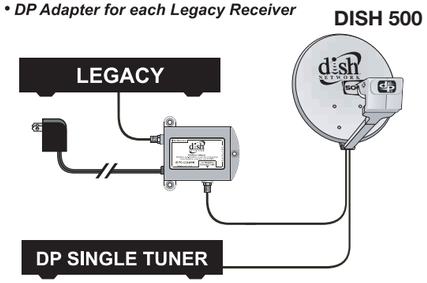

Connected to switch

- *(1) DP Twin on a DISH 500*
- *(1) DP Single on a DISH 300*
- *(1) DP34 Switch*
- *DP Adapter for each Legacy receiver.*

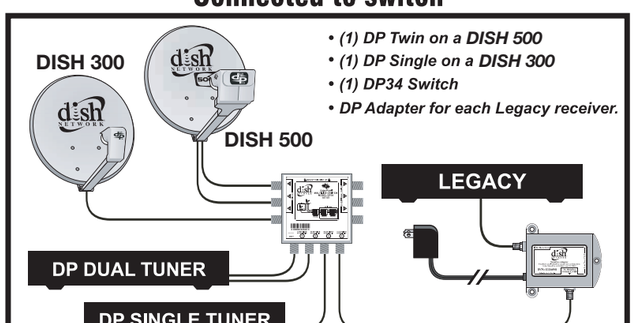

Note: Grounding according to the National Electrical Code (NEC) and all local electrical codes is required.